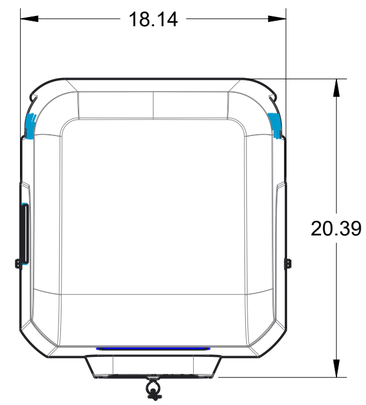
18.14
20.39

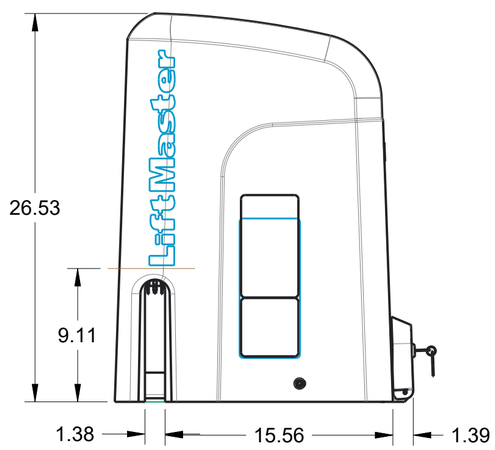
LiftMaster
26.53
9.11
1.38
15.56
1.39

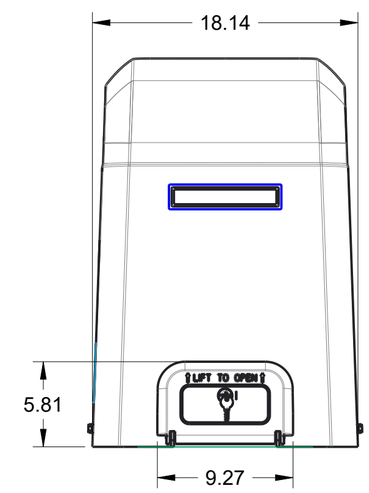
18.14
LIFT TO OPEN
5.81
9.27

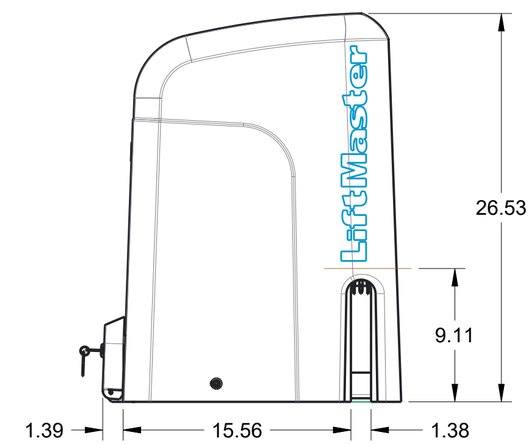
LiftMaster
26.53
9.11
1.39
15.56
1.38

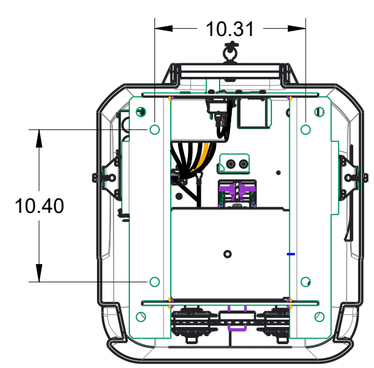
10.31
10.40